# Safety requirements for playground equipment
# Revision 1.2

This document describes safety requirements for post-installation inspections and annual inspections for public access playgrounds. It is assumed that the user of this document has a basic knowledge of playground safety requirements as laid out in European standard EN1176. The focus here is on requirements that are applicable to the Lappset product range.

The instructions are simplified. Details such as decimal places or even some minor requirements are left out to improve clarity. If any point is unclear the user should refer to the actual text of EN1176 year 2008 edition.

## Inspections

Post-installation inspections should be carried out before the playground is opened to the public. It may be carried out by any competent person. However it is suggested that this person was not involved in the installation. A signed and dated report should be completed and saved.

Routine inspections are only necessary where vandalism is commonplace. It can be expected that parents will report any defects to a telephone number that is clearly visible in the playground.

The manufacturer may determine an operational inspection with 1-3 month intervals for some specific equipment. Usually this is required due to wear, excessive movement or for products with critical structural integrity.

An annual inspection is the most important maintenance procedure. Usually after Winter products are checked for risks caused by wear, breakage and the like. The overall safety level should be established by maintenance at this time or by recording any faults and arranging for their immediate repair.

## Shock absorbing surfacing

Whether the product does or does not have an Impact Area, a Falling Space exists. The extent of the Falling Space should be a minimum of 150 cm and as high as the Falling Height. There should not be objects that are BOTH hard AND sharp. Such objects could be large stones, thorn bushes, fences and walls.

Extent of the Impact Area (marked X) depends on the type of equipment.

- For climbing equipment
  - Falling Height between 60 – 150 cm => X = 150 cm
  - Falling Height (marked Y) between 150 – 300 cm => X = 2/3 * Y + 50 cm

LAPPSET GROUP OY Hallitie 17 96101 Rovaniemi puh. 0207 750 100 fax 0207 750 101 lappset@lappset.com www.lappset.com

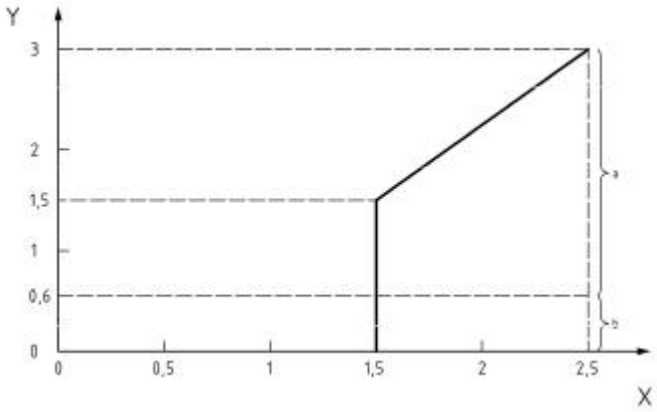


**Figure 1. Falling Height's relation to extent of impact area (Source SFS-EN1176).**
**If 0,6 ≤ y ≤ 1,5 then x = 1,5 (in meters)**
**If y >1,5, then x = 2/3 y + 0,5**

| | |
|---|---|
| **Y** | **free fall height** |
| **X** | **minimum dimension of impact area** |
| **a** | **impact attenuating surface with requirements** |
| **b** | **surface with no requirements, unless there is forced movement** |

- For swings
  - To the side:
    - For normal seats 88 cm from the centerline
    - For large seats 88 cm from a line which is 25 cm inside of the seat's edge
  - In front and behind:
    - 0,867 x chain length + 225 cm
    - In case of level surfacing, the furthest 50 cm has no shock absorbing requirements.

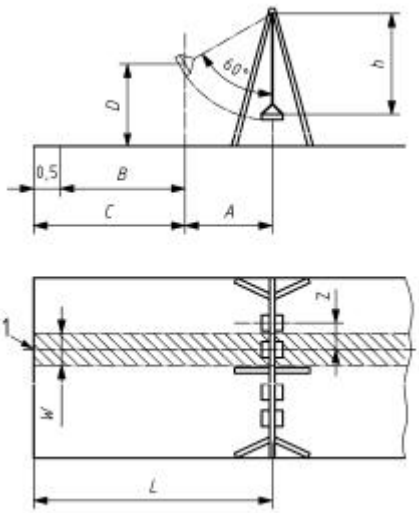


Figure 2. **Extents of swing's impact area (Source SFS-EN1176).**

| | |
|---|---|
| **A** | **0,867 x h** |
| **B** | **1,75 m for level impact absorbing surface (normally synthetic)** |
| **C** | **2,25 m for contained impact absorbing surfaces (normally loose fill)** |
| **D** | **maximum free fall height** |
| **L** | **A + B or A + C** |
| **W** | **width of the impact area** |
| **Z** | **distance between swing axes** |
| **h** | **length of the suspension member** |

- For slides
  - Sliding section
    - For sections with a height less than 60 cm => 100 cm
    - For sections with a height more than 60 cm => the area is the same as for climbing equipment.

LAPPSET GROUP OY Hallitie 17 96101 Rovaniemi puh. 0207 750 100 fax 0207 750 101 lappset@lappset.com www.lappset.com

- Run-out section:
  - To the side 100 cm
  - Forward
    - For type 1 slides: 200 cm
    - For type 2 slides, where the speed stops entirely before exit: 100 cm
  - A radius of 100 cm at corners

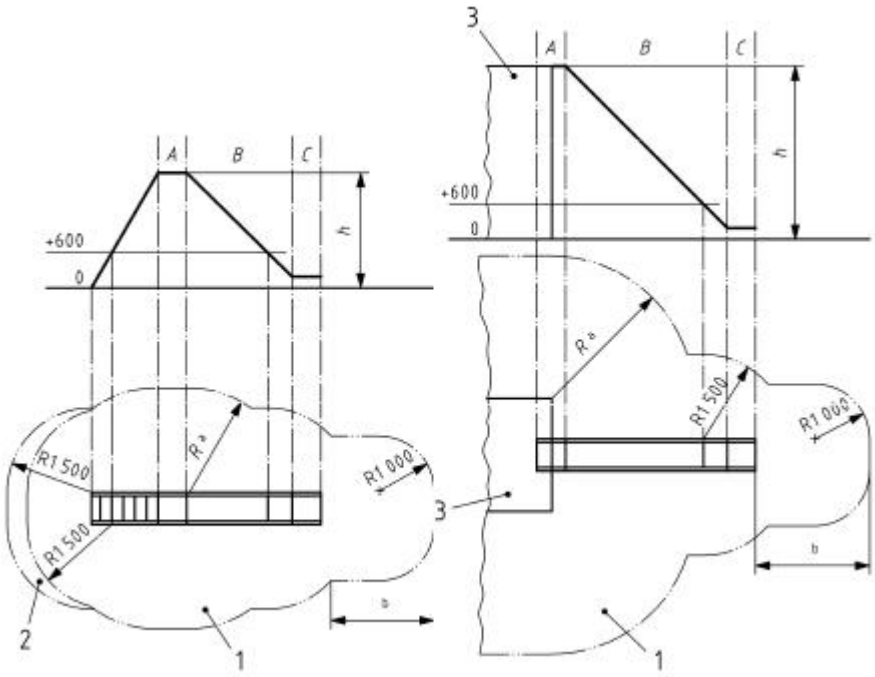


**Figure 3. Extent of slide's impact area (Source SFS-EN1176).**
**A** **starting section**
**B** **sliding section**
**C** **run-out section**
**h** **free fall height**

- For cableways
  - 200 cm to each side
  - Exit zone:
    - Extends 200 cm beyond the point where the seat traveler is against the stopper and the suspension element is at a 45° angle.
    - Exit zone narrows to 200 cm at its end.

LAPPSET GROUP OY Hallitie 17 96101 Rovaniemi puh. 0207 750 100 fax 0207 750 101 lappset@lappset.com www.lappset.com

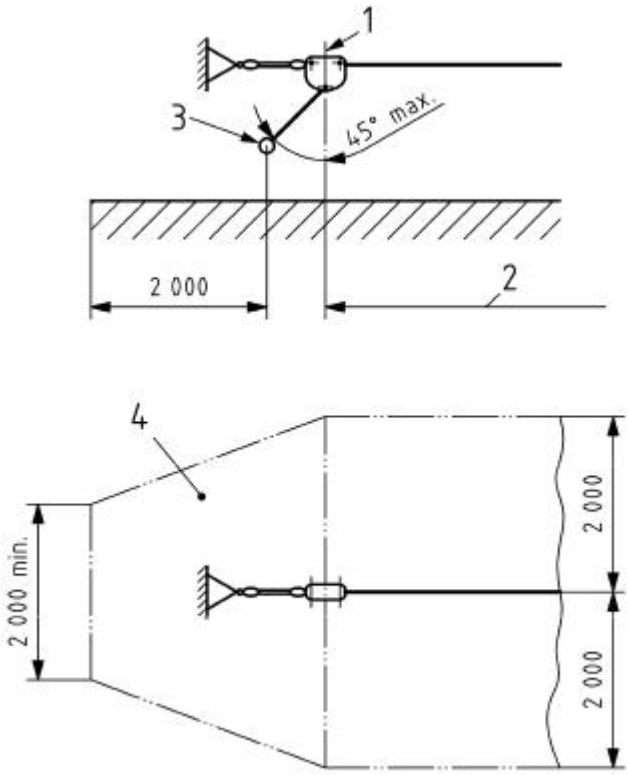


**Figure 4. Extent of cable-way's impact area (Source SFS-EN1176).**
**1 end of travel**
**2 area of travel**
**3 maximum seat or grip position**
**4 impact area**

- For carousels
  - 200 cm from the products maximum diameter
    - A hanging type carousel requires an additional 100 cm of obstacle free area.

- For rocking equipment
  - 100 cm from the equipment's extreme position

- For products without an Impact Area
  - Products which have a Falling Height of less than 60 cm and which cause no Forced movement in the user need have no impact area.

The Falling Height determines the minimum quality of the Impact Area. Falling Height is measured as follows:

- From the highest platform to the ground.
- In climbing equipment, from the highest grip position.
  - In case there is no access to the highest grip, Falling Height is measured from 100 cm below it or from the highest foot support.
- From the seat if falling to the ground can occur.
- From the middle of a swing chain.
- Carousel and cableways always have 100 cm Fall Height or more, according to the real Falling Height.
- From the highest point of a spatial net's side rope OR from the rope which extends over the bottom opening if this opening is more than Ø65 cm.

LAPPSET GROUP OY Hallitie 17 96101 Rovaniemi puh. 0207 750 100 fax 0207 750 101 lappset@lappset.com www.lappset.com

**Figure 5. Examples of determining free height of fall (Source SFS-EN1176).**

Critical Falling Height (marked CFH) is dependant on the surface, which dictates the products greatest Falling Height.

- Hard surfaces such as stone, asphalt or concrete; CFH = 0 cm:
  - Products without safety area.
  - Lappset recommends not using hard surfaces under any playground equipment.
- Timber or such with very limited impact attenuation; CFH = 60 cm:
  - Products with a Falling Height of less than 60 cm, including those with forced movement.
- Turf, unsorted sand and the like; CFH = 100 cm
  - Products with Falling Height of less than 100 cm, including slides, rocking equipment, carousels (not hanging type) and cableways.
- Safety slabs:
  - CFH depends on slabs thickness (marked S). Slabs with the same thickness can however have a different CFH. CFH varies roughly as follows:
    - S = 4 cm => CFH = 120…130 cm
    - S = 5 cm => CFH = 150…170 cm
    - S = 6 cm => CFH = 180…200 cm
    - S = 7 cm => CFH = 210…250 cm
- Loose fill materials, such as safety sand or gravel, wood chips or bark.
    - 30 cm layer => CFH = 200 cm
    - 40 cm layer => CFH = 300 cm

Locating equipment

- Impact area, which is for an equipment or part of an equipment with forced movement MAY NOT overlap with any other impact area.
- Impact area, which is for an equipment or part of an equipment with no forced movement MAY overlap with another similar impact area.

**Signs and markings**

Playgrounds should have a sign with the following information:

- general emergency telephone number
- telephone number to contact maintenance personnel
- name and address of the playground.

Product labeling

- Labels should be fastened to correct products!

Basic level mark

- There should be at least one basic level mark in the product, which allows checking correct installation height.

LAPPSET GROUP OY Hallitie 17 96101 Rovaniemi puh. 0207 750 100 fax 0207 750 101 lappset@lappset.com www.lappset.com

**Safety requirements: Playground equipment**

Structural integrity
- Is there rust or rot?
- Does the product sway excessively?
- When moving the structure, does any suspicious noise indicate possible hidden structural weaknesses?

Fasteners and caps
- Are screws and brackets tightened correctly? In particular check structures that are under heavy movement.
- Are any caps or hats missing?

Sharp edges and protruding objects should be protected.
- Edges that are accessible during normal use shall be rounded with at least a 3 mm radius. No parts may be sharp enough to cut.
- If the head of the fastener or thread bar is not protected by other means, it may not protrude more than 8 mm from the surface.

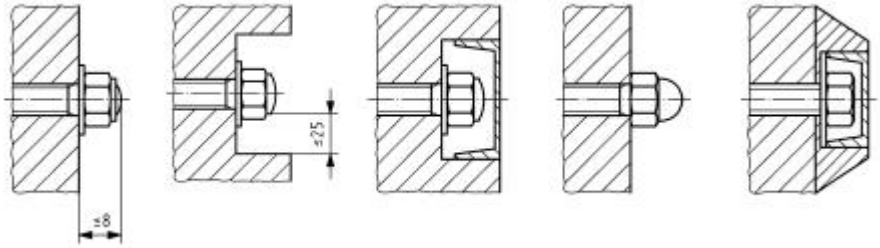


**Figure 6. Examples of protecting protruding objects (Source SFS-EN1176).**

Platform is easily accessible if
- it can be accessed by stairs or ramp from the ground or from another easily accessible platform.
- it can be accessed by ladders with the lowest rung less than 40 cm from the ground or from another easily accessible platform.
- it is tiered less than 60 cm from the ground or from an adjacent easily accessible platform.

Falling protection
- Easily accessible platform
  - At a height of less than 60 cm, no guardrail or barrier is required.
  - At a height of more than 60 cm, a barrier is required.

- Non easily accessible platform
  - At a height of less than 100 cm, no guardrail or barrier is required.
  - At a height 100 - 200 cm, a guardrail is required.
  - At a height of more than 200 cm, a barrier is required.

LAPPSET GROUP OY Hallitie 17 96101 Rovaniemi puh. 0207 750 100 fax 0207 750 101 lappset@lappset.com www.lappset.com

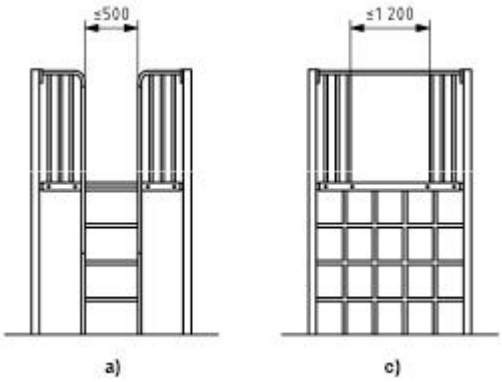


**Figure 7. Openings leading to steep play element (Source SFS-EN1176).**

Requirements for guardrail and barrier

- Top of the guardrail shall be at a height between 60 – 85 cm.
- Barrier shall be at least 70 cm high.
- There shall be no elements that can be used to climb.

Entrapments

- Apparatus:

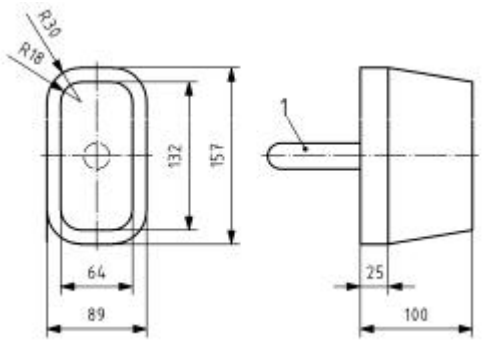


**Figure 8. Probe C (small body): 89x157 mm (Source SFS-EN1176).**

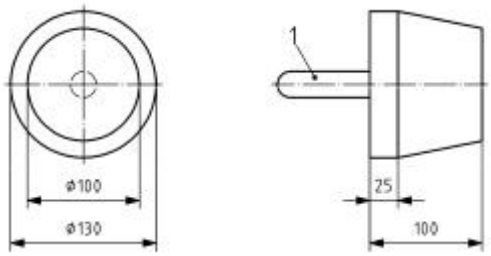


**Figure 9. Probe E (small head): Ø130 mm (Source SFS-EN1176) .**

LAPPSET GROUP OY Hallitie 17 96101 Rovaniemi puh. 0207 750 100 fax 0207 750 101 lappset@lappset.com www.lappset.com

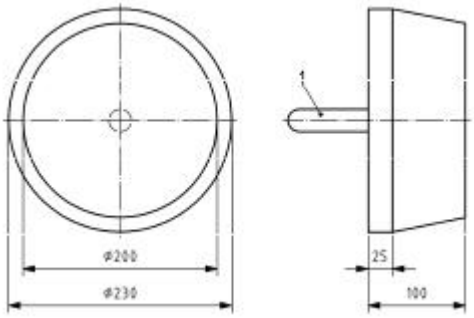


**Figure 10. Probe D (large head): Ø230 mm (Source SFS-EN1176).**

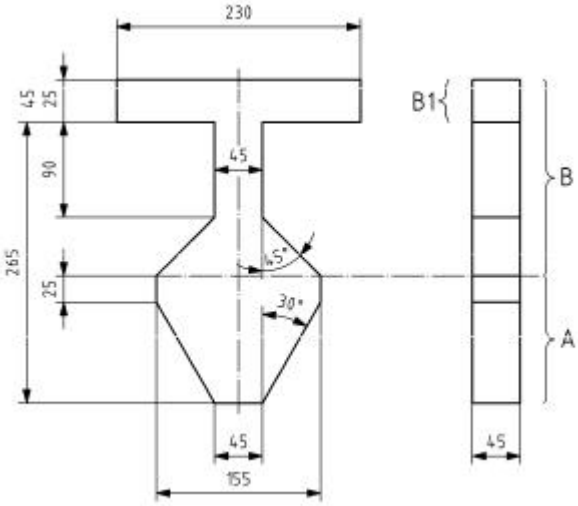


**Figure 11. Neck: 45x45 mm / 45 mm + 60° (Source SFS-EN1176).**
**A** "A" portion of probe
**B** "B" portion of probe
**B1** shoulder section

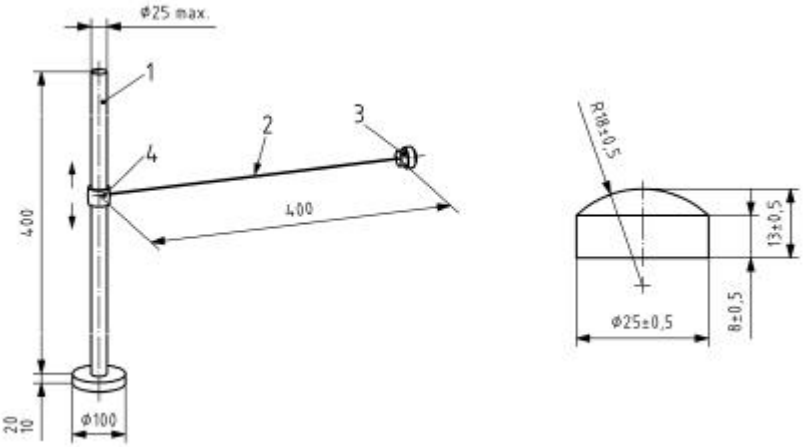


**Figure 12. Clothing: 40 cm bar + 40 cm chain + Ø25 mm toggle (Source SFS-EN1176).**

LAPPSET GROUP OY Hallitie 17 96101 Rovaniemi puh. 0207 750 100 fax 0207 750 101 lappset@lappset.com www.lappset.com

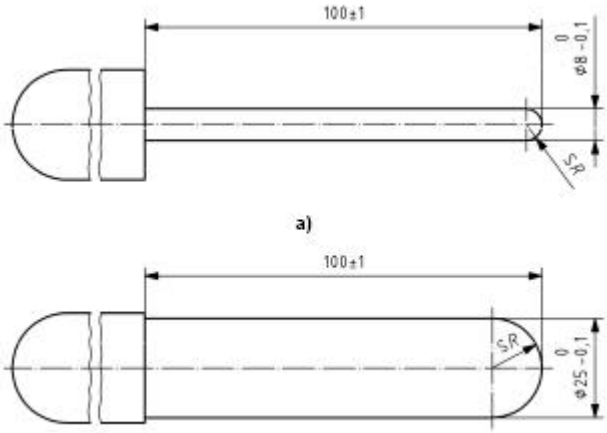


**Figure 13. Small finger rod: Ø8; Big finger rod: Ø25 (Source SFS-EN1176).**

- The body fits through an opening that has a diameter of at least Ø40 cm. However openings greater than Ø23 cm are also allowed.
- Head entrapment
  - If test probe C or E fits through the opening, probe D must also pass through.
  - If the opening is partially flexible and the gauge almost passes through, apply a force comparable to a mass of 22 kg.
  - Test is not applicable to openings with a lower edge of height less than 60 cm nor to triangular openings in swing seat suspensions.
- Neck entrapment. Test procedure is relatively complex. This is a simplified presentation.
  - Openings that are partially bound, V-shaped and open upwards shall
    - be smaller than 45x45 mm (test gauge portion B), or
    - have bottom wider than 45 mm and boundaries with greater angle than 60° (test gauge portion A)
- Foot entrapment on the surface
  - Openings shall not be wider than 30 mm measured across the main direction of travel.
- Finger entrapment
  - If the small finger rod passes through the opening to a depth, which restricts movement to less than 45° from adjacent surface, the big finger rod shall also pass the opening.
  - Test is not applicable to openings below 100 cm in height.
  - Any chain openings greater than Ø8,6 mm are forbidden except at connections where openings greater than Ø12 mm are allowed.
- Entrapment of clothing or hair
  - Slides
    - Place the equipment 20 cm from sliding sections starting point and 20 cm from slides side. Slide the chain along the full length of the pole searching for possible entrapments with toggle. Don't wrap the chain around corners, pipes etc. If the toggle gets caught, pull the chain with a force comparable to a mass of 5 kg in the sliding direction.
  - Fireman's pole
    - Place the equipment at the edge of the platform in the middle of egress opening and search for possible entrapments.
    - Detach the chain from the pole. Keep one end of the chain in contact with the pole. Starting from a height of 180 cm above starting platform (or from top of the pole), search for possible entrapments.
  - Apex of the roof
    - Detach the chain from the pole. Search for possible entrapments from the apex and the surface of the roof while pulling the chain in the direction of the slope.

LAPPSET GROUP OY Hallitie 17 96101 Rovaniemi puh. 0207 750 100 fax 0207 750 101 lappset@lappset.com www.lappset.com

- Toggle test shall not be used elsewhere. If some local rule expands clothing entrapments elsewhere, this test shall not be used. This test is designed to be especially sensitive to fit play elements with great forced movement.

Squeezing
- Body clearance for openings where squeezing is likely shall be at least 23 cm.
- Foot clearance for openings where squeezing is likely shall be at least 6 cm.
- Finger clearance for openings where squeezing is likely shall be at least Ø12 mm.

Ropes
- Ropes fixed at one end:
  - Diameter of the rope shall be between 25 - 45 mm
  - Swinging ropes shall not be placed in the same bay as swings
  - Between 1 - 2 m long
    - Safety distance to post 60 cm
    - Safety distance to another rope 90 cm
  - Between 2 - 4 m long
    - Safety distance to post or rope 1,0 m
- Rope fixed at both ends shall not allow a loop greater than Ø130 mm.

Foundations
- Product shall keep its place so there is no risk of moving and falling.
- Depth
  - Sharp parts shall be at depth of more than 40 cm or at least underneath a loose safety material layer.
  - Smooth and well rounded are allowed at depth of more than 20 cm.

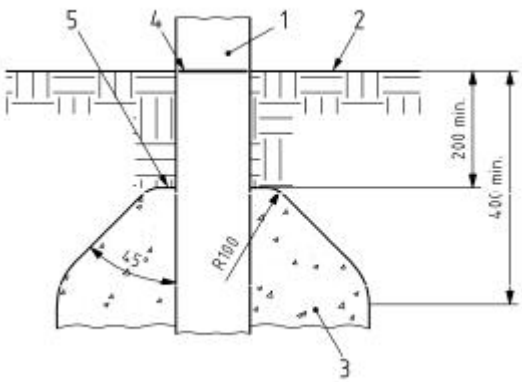


**Figure 14. Foundations (Source SFS-EN1176).**
**1 post**
**2 Playing surface**
**3 foundation**
**4 basic level mark**
**5 top of foundation**

Heavy suspended beams
- R50 mm rounding at ends
- Maximum range of motion 20 cm
- Minimum distance to standing construction 23 cm

LAPPSET GROUP OY Hallitie 17 96101 Rovaniemi puh. 0207 750 100 fax 0207 750 101 lappset@lappset.com www.lappset.com

**Safety requirements: Swings**

Ground clearance
- Tyre, group and cradle seats min 40 cm
- Normal seat min 35 cm

Safety distances
- From post to the edge of the seat 0,2 * chain length + 20 cm
- Between seats 0,2 * chain length + 30 cm

Lateral stability is sufficient when the distance between the fastenings on the beam are 0,05 * chain length wider than the fastenings on the seat.

Seats front edge must attenuate impact. The extent of this property cannot be tested on the field but for example a wooden seat would not be allowed.

A cradle seat is allowed in the same bay as other seats.

If the seat has a back rest, its angle to the seat may not vary during use.

Swing bearings must allow chain rotation.

**Safety requirements: Slides**

Width shall be less than70 cm or more than 95 cm.
- Each section of multi-track slide, helical slide and curved slide shall have width less than 70 cm.

Requirements for free standing slides only
- Straight raise of stairs may be max 2,5 m.
- When slides starting height is more than 200 cm, the starting sections guarding shall fulfill barrier requirements.

Attachment slides
- There shall be a crossbar over starting section at height 60 – 90 cm when starting height is more than 100 cm.
- If starting section is outside the platform, there shall be lateral guarding with height more than 50 cm at some point within the section.

Sections of the slide
- Starting section (marked A)
  - Starting section ends at the point where the slide first inclines more than 5° in the sliding direction.
  - Starting section shall be at least 35 cm long.
- Sliding section (marked B)
  - Average inclination may be max 40°
  - Greatest inclination at one point may be 60°
- Run-out section (marked C)
  - Starting point is determined by placing a straight level marker on run-out section. Move the marker upwards until it has :
    - 10° angle to horizontal in type 1 slides.
    - 5° angle to horizontal in type 2 slides.
  - Length of the run-out section
  - B < 150 cm => C > 30 cm min.
  - Type 1 slides:
    - B = 150 … 750 cm => C > 50 cm
    - B > 750 cm => C > 150 cm
  - Type 2 slides:
    - B > 150 cm => C > 0,3 x B

LAPPSET GROUP OY Hallitie 17 96101 Rovaniemi puh. 0207 750 100 fax 0207 750 101 lappset@lappset.com www.lappset.com

Assessing slides requirements can be challenging. Most of the confusion comes in identifying different slide types. Type one has longer run-out section and short Impact Area in front of the exit point. Respectively type 2 has a long run-out section and short Impact Area.

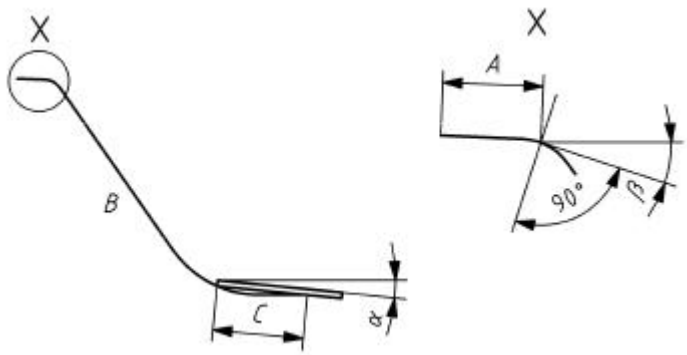


**Figure 15. Sections of the slide (Source SFS-EN1176).**
**A** **starting section measured along the surface of the slide**
**B** **sliding section measured along the surface of the slide**
**C** **run-out section measured along the surface of the slide**
**α** **maximum declination of the run-out section**
**β** **maximum declination of the starting section**

Lateral protection height (marked LP) depends on the height and accessibility of the slides starting point (marked SH).
- Always when SH < 120 cm => LP > 10 cm
- Always when SH = 120 … 200 cm => LP > 15 cm
- When easily accessible and SH = 200 … 250 cm => LP > 50 cm
- When not easily accessible and SH = 200 … 250 cm => LP > 15 cm
- Always when SH > 250 cm => LP > 50 cm

Maximum height of run-out section (marked RH) depends on length of sliding section (marked B).
- B < 150 cm => RH < 20 cm
- B > 150 cm => RH < 35 cm

## Safety requirements: Cable-ways

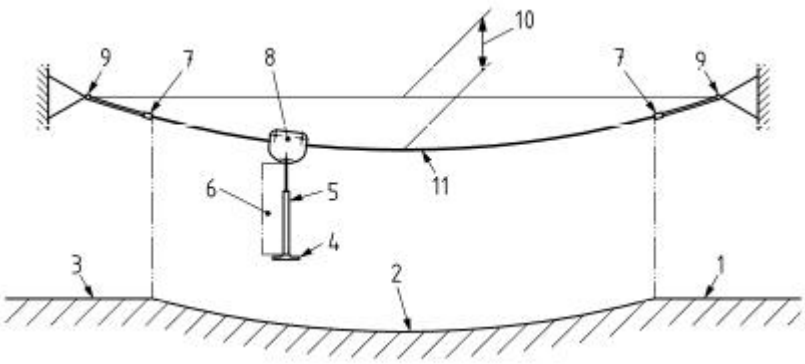


**Figure 16. Cableway terms (Source SFS-EN1176).**
**1/3** **starting point or terminus**
**2** **area of travel**
**4** **seat**
**5** **grip**
**6** **suspension element**
**7** **stop**
**8** **traveler**
**9** **cable fixing points**
**10** **sag**
**11** **cable**

LAPPSET GROUP OY Hallitie 17 96101 Rovaniemi puh. 0207 750 100 fax 0207 750 101 lappset@lappset.com www.lappset.com

There shall be a tightening mechanism for the cable.

Movement stops at a stopper, which shall have a damping mechanism preventing the suspension members inclination beyond 45°.

Traveler sheaves shall be covered to prevent finger squeezing accidents. Normal use shouldl not allow traveler to cause damage to the cable.

Suspension assembly

- Cable height from seat shall be at least 210 cm.
  - 180 cm is allowed if traveler is fully enclosed.
- Cable may not be rigid.
- The seat (or grips) shall allow quick dismounting at all times.
- The seat shall be impact attenuating to the same standard as swing seats.

- Maximum speed of the seat assembly is 7 m/s. For measuring this, a 130 kg load is placed on the seat. The seat is pulled backwards to an angle of 30° before it is released. Maximum speed is measured.
  - As accurate measuring is very difficult, the speed can be estimated in the following way. One test person uses the equipment while other runs alongside. 7 m/s is close to maximum running speed for a normal adult. If runner can hold position alongside the traveler to the end, the speed is likely not too great.

Ground clearance

- For seating type cableways the ground clearance in the middle of travel shall be 40 cm when the seat has 130 kg load.
- For hanging type cable-ways the ground clearance shall be
  - 150 cm at starting point when measured unloaded.
  - 200 cm in the running position when measured with a 70 kg load.

The surface of the starting platform may be wood or even metal.

**Safety requirements: Carousels**

Rotating equipment with a diameter of more than 50 cm are considered carousels.

Carousels axis may not be inclined more than 5°.

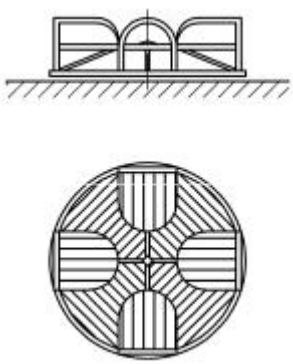

**Figure 17. Traditional carousel (type B) (Source SFS-EN1176).**

LAPPSET GROUP OY Hallitie 17 96101 Rovaniemi puh. 0207 750 100 fax 0207 750 101 lappset@lappset.com www.lappset.com

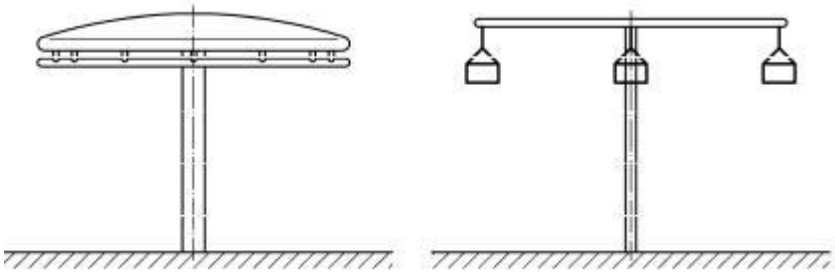

**Figure 18. Hanging carousel (type C) (Source SFS-EN1176).**

Classic carousel with rotating platform

- If the platform is flush with the ground,
  - vertical gap may be max 8 mm.
  - vertical displacement shall be max 20 mm.
- When the platform is not flush with the ground minimum ground clearance is 6 cm.
  - When ground clearance is between 6 - 11 cm, the underside of the platform shall be smooth for an extent of 30 cm measured from the edge towards the central axis.
  - When ground clearance is between 11 - 40 cm, the platform shall be equipped with a skirt or the underside of the platform shall be smooth and the ground clearance shall decrease from the outer perimeter towards the middle.
    - If a skirt is used, it shall have 6 - 11 cm ground clearance and it shall lean inwards with an angle of 30 - 45° from vertical.
  - When ground clearance is more than 40 cm, the underside of the platform shall be smooth and the ground clearance shall decrease from the outer perimeter towards the middle.

Hanging type carousels

- Ground clearance shall be at least 180 cm when hand supports are rigid and discontinuous.
- Hand supports shall allow grip. This means that a cross cut sections every dimension shall be between 16 - 45 mm.

**Figure 19. Grip (Source SFS-EN-1176).**

Safety standard EN1176-5 also has safety requirements for rotating chair carousels, track driven carousels and giant revolving discs. Because of relative rarity of these carousel types those are excluded from this document.

LAPPSET GROUP OY Hallitie 17 96101 Rovaniemi puh. 0207 750 100 fax 0207 750 101 lappset@lappset.com www.lappset.com

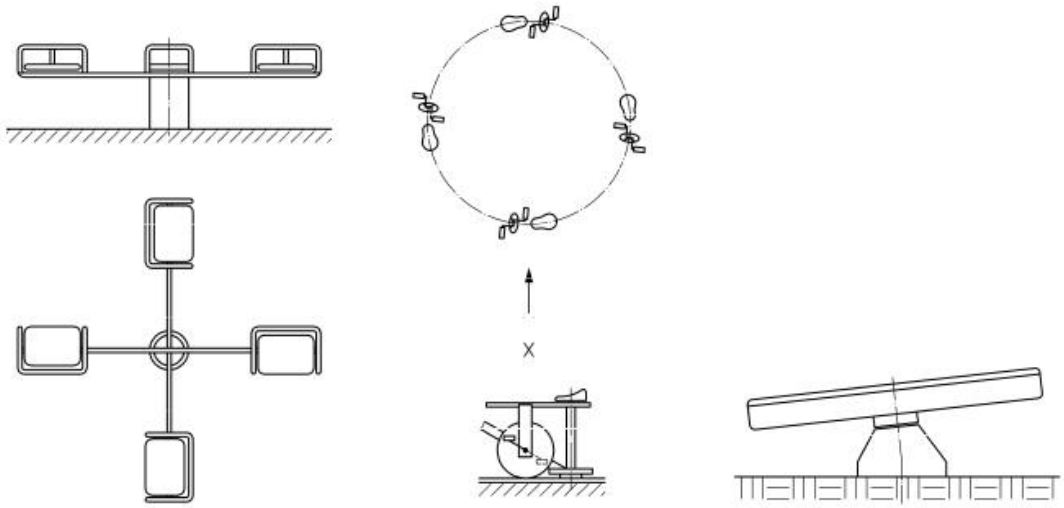


**Figure 20. Other tupes of carousel (Source SFS-EN1176).**

## Safety requirements: Rocking equipment

Rocking equipment is divided into 6 types.

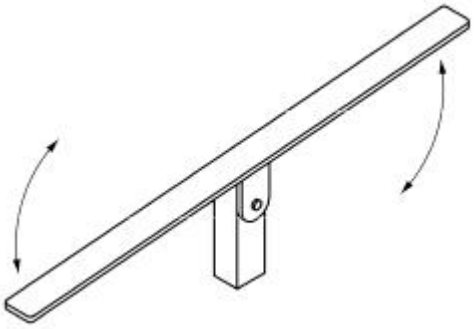

**Figure 21. Traditional seesaw (type 1) (Source SFS-EN1176).**

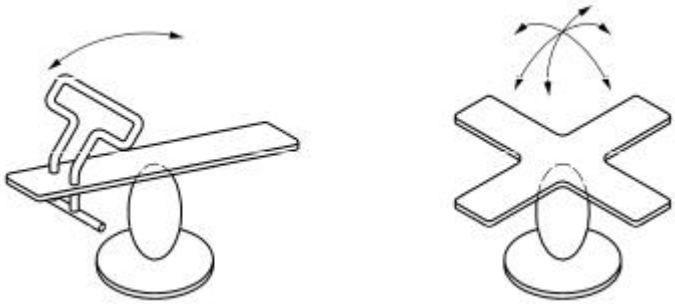

**Figure 22. Single point rocking equipment (type 2A and 2B) (Source SFS-EN1176).**

LAPPSET GROUP OY Hallitie 17 96101 Rovaniemi puh. 0207 750 100 fax 0207 750 101 lappset@lappset.com www.lappset.com

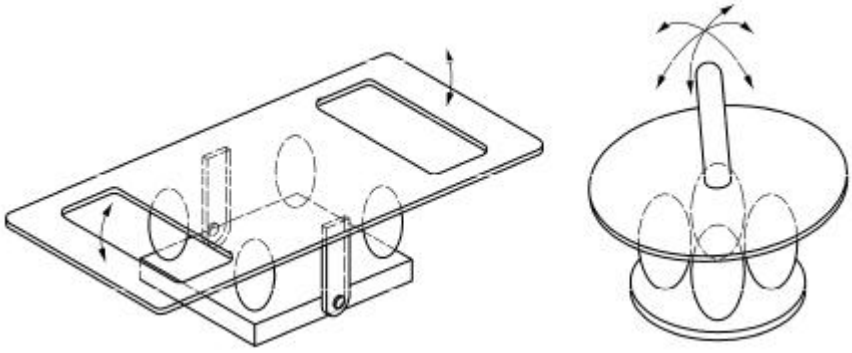

**Figure 23. Multi-point rocking equipment (type 3A and 3B) (Source SFS-EN1176).**

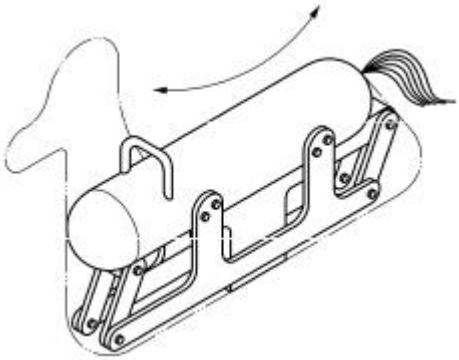

**Figure 24. Rocking seesaw (type 4) (Source SFS-EN1176).**

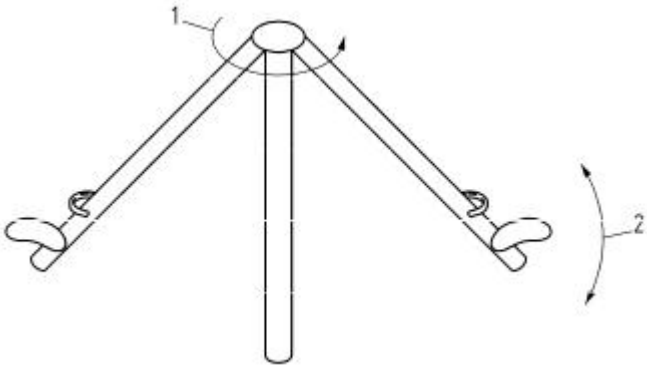


**Figure 25. Sweeping seesaw supported above the user station (type 5) (Source SFS-EN1176).**

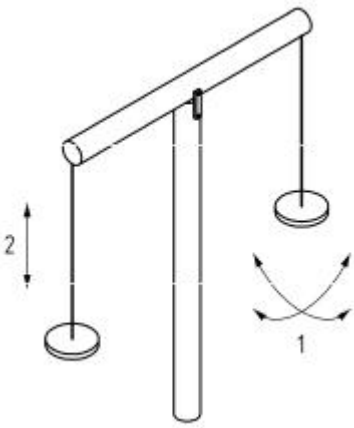


**Figure 26. Overhead axis seesaw (type 6) (Source SFS-EN1176).**

Falling Height (marked H) is measured in the highest position from the middle of the seat.

- Traditional seesaw (type 1): H < 150 cm

LAPPSET GROUP OY Hallitie 17 96101 Rovaniemi puh. 0207 750 100 fax 0207 750 101 lappset@lappset.com www.lappset.com

- Rocking equipment (type 2 and 3) and rocking seesaw (type 4): H < 100 cm
- Sweeping- and overhead single axis seesaws (type 5 and 6): H < 200 cm

When one side of the equipment is moved to its extreme position, supporting components may not form openings of less than Ø12 mm.

Movement shall be damped.

Footrests are not mandatory.

Ends of footrests and hand supports shall be protected against eye- ball injuries. This is tested with a ring gauge. The gauge is placed over the projecting end. Any part of a footrest or hand support may not protrude beyond the gauge.

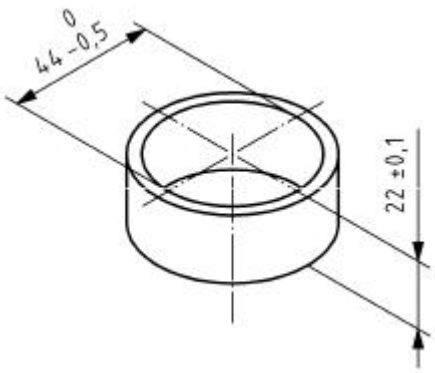


**Figure 27. Ring gauge (Source SFS-EN1176).**

Rocking equipments side view profile shall not have projections with a radius of less than 20 mm.

Lateral deviation is small enough when the seating position is pushed sideways with a force comparable to a mass of 70 kg and
- traditional seesaws deviation is less than 14 cm measured 200 cm away from the axis point.
- multi-point seesaws deviation is less than 17 cm measured 200 cm away from the imaginary central axis (= 5°).
- Other types of rocking equipment do not have this requirement.

Rocking seesaws (type 4) total range of movement shall not exceed 60 cm.

**Safety requirement: Net climbers**

Protection against falling
- The network should be so dense that every cavity is smaller than Ø65 x 180 cm.
- If spatial network is formed from planar nets, and the dimension between nets is over 100 cm, the openings should be less than Ø420 mm.
- If the requirements above are not fulfilled the structure underneath shall provide sufficient impact attenuation.

If the networks rigid supports are smooth and inclined, they are allowed even if the Falling Height is over 60 cm. The greatest allowed Falling Height (marked Hincl) depends on the supports angle.
- 30° => Hincl = 70 cm
- 45° => Hincl = 85 cm
- 60° => Hincl = 120 cm
- 70° => Hincl = 175 cm
- 80° => Hincl = 300 cm

Downward leaning angles between ropes shall not be sharper than 20°.

LAPPSET GROUP OY Hallitie 17 96101 Rovaniemi puh. 0207 750 100 fax 0207 750 101 lappset@lappset.com www.lappset.com